COASTAL AMUSEMENTS INC.

STANDARD OPERATING MANUAL

Version: BTP 2.1.4 ST4

BREAK THE PLATE

TABLE OF CONTENTS

INTRODUCTION 3

SAFETY NOTICES 3

INSTALLATION 4

INTERNET OPTIONS INSTRUCTIONS 5

MENU OPTIONS 8

EXPLODED DIAGRAMS 13

SCHEMATICS 20

FACTORY WARRANTY 25

INTRODUCTION

Break the Plate is a 1 or 2 player amusement redemption game where the player throws balls at a video screen in an effort to 'break' the plates to score points. The game has 3 video monitors stacked vertically, each stepped back from the other. Tickets are awarded based on the number of points scored. In a 2 player 'competitive' game, the player that scores the most points is the 'winner' and may be awarded additional tickets.

SAFETY NOTICE

This Manual describes how to set up and use this product. It is intended to instruct the owner/operator and qualified maintenance personnel to safely and correctly operate the game. Be sure to follow all the safety and warning instructions described to prevent personal injury and/or damage to the game.

- Before connecting the machine to the main power source, verify that the voltage is correct to avoid fires or electric shock.
- DO NOT touch the plug with damp hands.
- To avoid electric shock and short circuit, DO NOT expose the power cord or ground wire across walkways.
- DO NOT place any flammable objects close to the power cord.
- When plugging/unplugging the power cord, make sure to hold the plug. DO NOT pull on the power cord.
- In the event of a frayed or broken power cord, please contact your dealer for replacement.
- DO NOT use fuses or parts that are not recommended by the manufacturer.
- DO NOT disassemble, change or modify the machine without authorization. Inappropriate handling of the machine may cause damage to the game and injury to players and spectators.
- Please check and maintain the game regularly.
- Standing or climbing on the game is prohibited to avoid injury

POWER SOURCE

IMPORTANT!

- GAME MUST BE CONNECTED TO A GROUNDED POWER SOURCE.
- GAME MUST HAVE GROUND CONNECTION FOR PROPER OPERATION AND USER SAFETY PROTECTION.
- DO NOT OPERATE GAME WITH GROUND LEAD CUT OFF POWER CORD.

INSTALLATION

POWER UP:

Upon power being turned on (and computer booting) the monitors will show the software assets being loaded. Upon successful power up, the game will then go into attract mode. The boot up sequence may take up to 60 seconds to complete. **DO NOT TURN OFF POWER DURING THIS SEQUENCE**.

TECHNICAL INFORMATION:

1. The "brains" of the game are Raspberry Pi v-3 minicomputers nested in a custom I/O board, which controls all lights, motors, solenoids and audio. The O/S and game software reside in a micro SD card plugged into the Raspberry Pi. The Pi-I/O board also has its own microprocessor that controls all the multi-color addressable LEDs.

2. **Audio/Video**; Video comes from the HDMI port on the Raspberry Pi. The cable from Pi to monitor is male HDMI to male DVI. Audio comes from the 3.5mm (1/8 inch) stereo jack on the Pi-I/O board, NOT the Raspberry Pi despite that it has its own jack as well. Volume is adjustable from the menu as well as the volume knob on the amplifier. Typically, the amplifier is set to some fixed point, and volume is adjusted from the menu.

3. **Power:** There are two power supplies in the game. A 24 volt @ 8.8 ampere supply, and a 12 volt @ 10 ampere/5 volt @ 20 ampere supply. Both supplies are UL rated and run on 110v or 220v 50/60 Hz mains. However, the operating voltage must be switched manually.

INTERNET OPTIONS INSTRUCTIONS

Your game software contains an option to connect through the internet to Coastal Amusements. This will allow the game to report its accounting information and settings to us and suggest changes to improve income generation. It will also allow the game to receive any software updates / bug fixes without the need to have the software shipped to you. The next pages will explain how to enable this setup.

To enter the configuration screen, connect a keyboard to the motherboard. Then enter the menu and select the option titled 'INTERNET OPTIONS'. Alternatively, you can just press the Escape key on the keyboard. You will be presented a screen similar to this one:

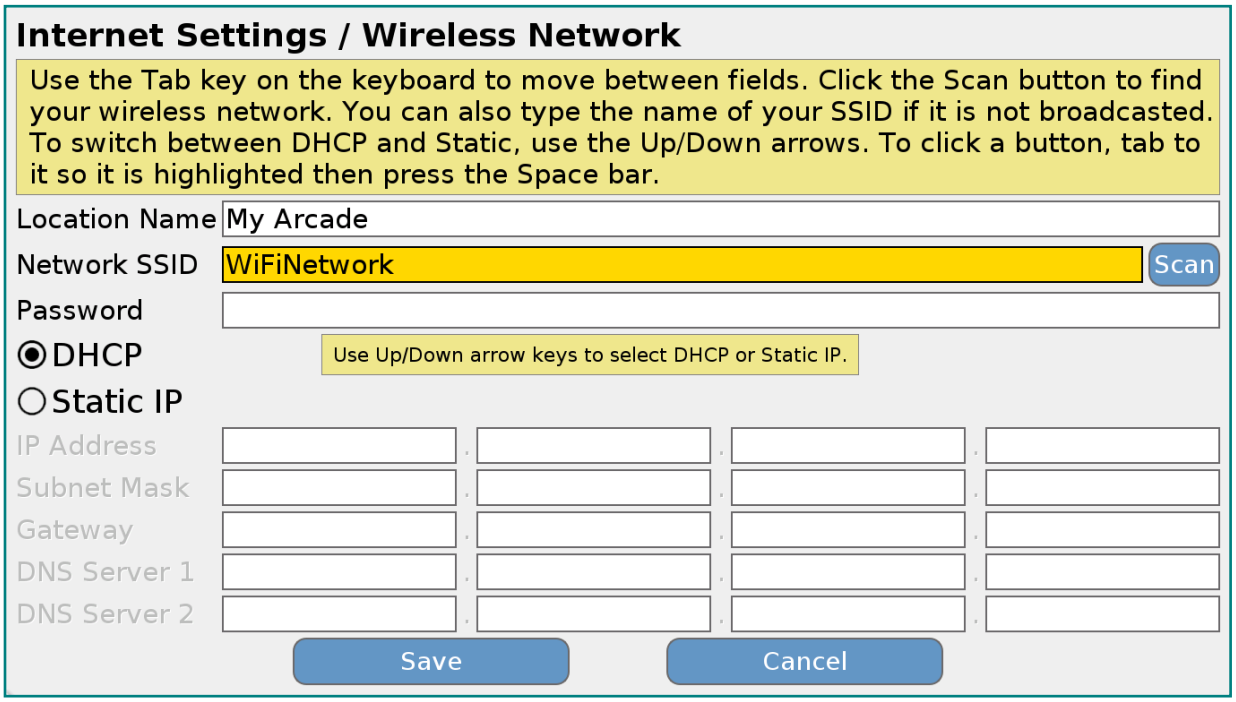

In the 'Location Name' field, enter your store name and location for reference (i.e. Joe's Arcade-Baltimore MD).

The Network SSID will show the first wireless network found. If this is not your preferred network, enter the name manually or press 'TAB' until the 'Scan' button is highlighted in yellow and then press space. (If you ever need to 'TAB' back to a previous item, hold down 'SHIFT' when you press 'TAB'). You will then see a screen similar to the following:

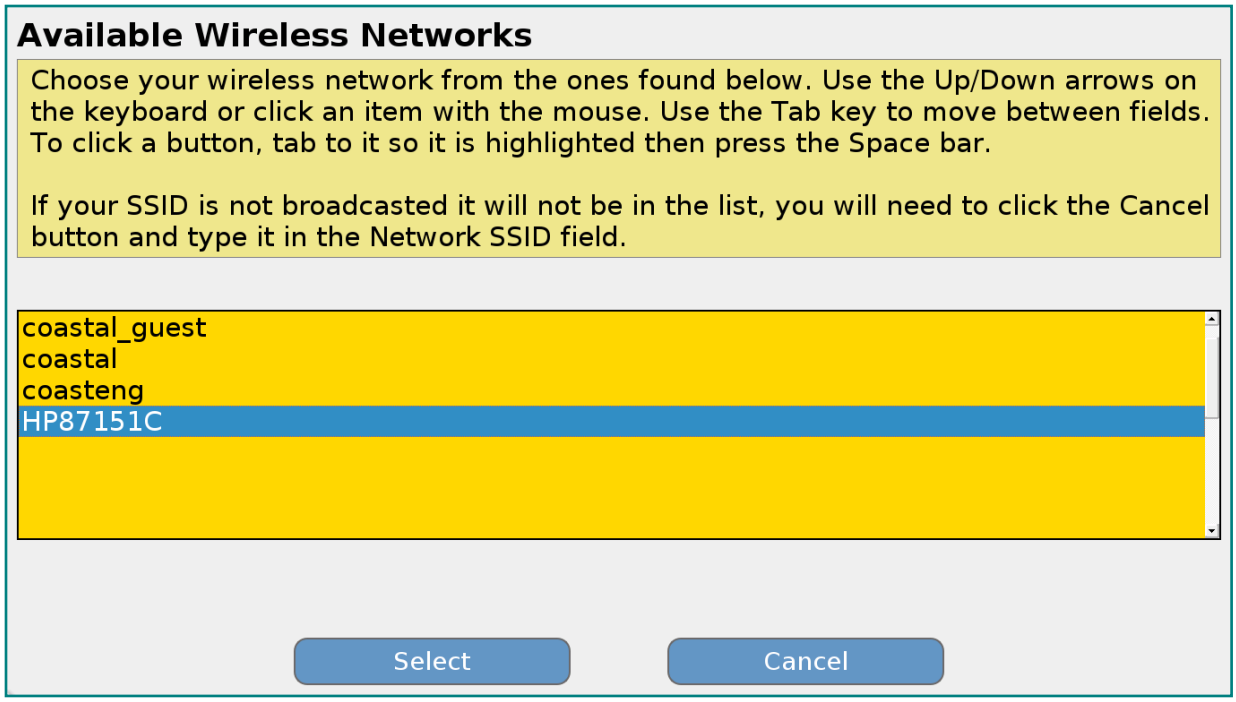

Use the up/down arrows to select the network you wish to use, then press 'TAB' to highlight the 'Select' button and press the space bar.

If your network uses DHCP (usually the case), leave the DHCP button selected. If you use static IP addresses, select the Static IP button.

If you selected Static IP, you will need to enter the correct information into the next fields. Consult your ISP for the correct addresses for your location. If you do not have a second DNS server, you can enter 8.8.8.8 or 8.8.4.4 to use Google's DNS servers or find another public DNS server on the web.

When all fields are correctly filled out, tab down to the 'Save' button and press the spacebar. You will then see the following screen:

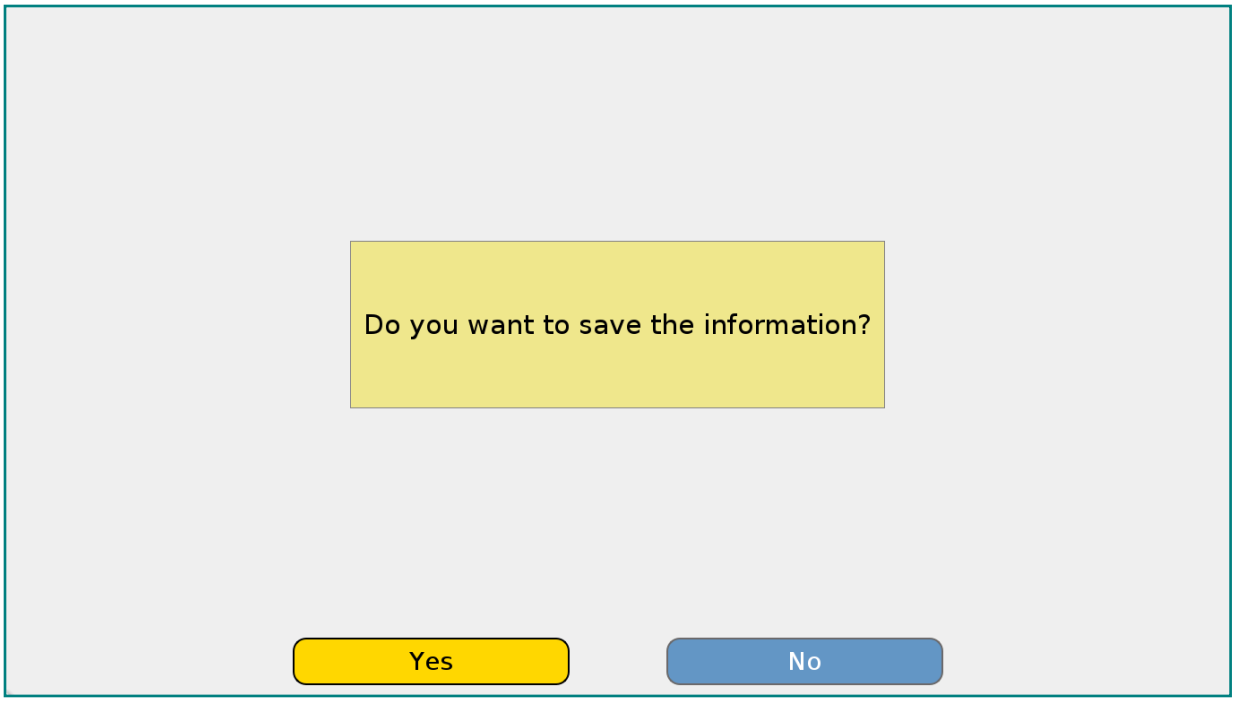

Press the spacebar to select ‘Yes’ and you will see this screen:

You can now remove the keyboard and reboot the game. Upon reboot, the game will then attempt to make an initial contact with our server.

If you have any questions, call Coastal Amusements at +1 (732) 905-6662. Support is available from 08:00 to 16:30 PM EST, Monday through Friday.

BREAK THE PLATE MENU OPTIONS

Press the ***Menu*** button to enter the system set up and then use the following buttons to navigate through the menus:

ATTENDANT: Use to move **up** in the menu and to **increment** values

RESET: Use to move **down** in the menu and to **decrement** values

MENU: Use to **select** a menu item, and to **set** menu item values

MAIN MENU

PRICING ADJUSTMENTS

Setting	Options	Default	Description
FREE PLAY	ON/OFF	OFF	When set to 'ON' the mechanical meters will be disabled, no tickets will be paid, and 'FREE PLAY' will be displayed on the Console matrix. An external switch must be attached to one of the coin mech inputs to simulate a coin drop.
CARD PLAY	ON/OFF	ON	Select 'ON' if you are using a card device instead of cash.
CREDITS TO START	1-10	1	Set this option to the number of credits needed to start one game. ***This option is disabled when "Card Play" is set to 'On'***.
COIN CHUTE 1 CREDIT	1-10	1	This option controls how many credits are given for each coin inserted into coin mech 1. ***This option is disabled when "Card Play" is set to 'On'.***
COIN CHUTE 2 CREDITS	1-10	1	This option controls how many credits are given for each coin inserted into coin mech 2. ***This option is disabled when "Card Play" is set to 'On'.***
TICKET VALUE	$0.001 to $0.10 $0.001 increments)	$0.01	This option should be set to the cash value of one ticket. Note: This setting must be accurate in order to correctly calculate the overall percentage payout of the game.
CREDIT VALUE	$0.10 TO $5.00	$1.00	Set this option to the monetary value of one credit for accurate bookkeeping stats. Note: This setting must be accurate in order to correctly calculate the overall percentage payout of the game.

PAYOUT ADJUSTMENTS

Setting	Options	Default	Description
ENABLE TICKETS	OFF/ DURING GAME PLAY/ AT END OF GAME	DURING GAME PLAY	Setting this to off will prevent the ticket dispenser from dispensing tickets (or the card system from receiving wins). High score mode will be enabled. DURING GAME PLAY pays tickets while the game is in play. AT END OF GAME pays tickets at the end of the game.
POINTS PER TICKET	1-250	15	This value determines how many points are needed to award one ticket.
MERCY TICKET THRESHOLD	OFF, 1-40	OFF	When set, this is the minimum number of tickets awarded to the player, regardless of score.
FIXED TICKET	OFF; 1-40	OFF	Awards fixed amount of tickets regardless of score.
COMPETITION WINNER TICKETS	0-100	15	Awards extra tickets to the winner in a 2-player game.
RESET HIGH SCORES ON STARTUP	ON/OFF	OFF	Will reset high scores back to initial startup values. *Only visible in high score mode.*
FREE GAME FOR HIGH SCORE	ON/OFF	OFF	Grants player a free game if they get the high score. *Only adjustable in high score mode.*

GAME ADJUSTMENTS

Setting	Options	Default	Description
VOLUME	0-100	50	This option sets the main volume during game play.
ATTRACT SOUND	ON/LOW VOLUME/OFF	ON	Select whether or not you want attract sound on, off, or at a lower volume in the attract mode, than game play.
TIME TO JOIN	5-30	8	Adjusts the amount of time the 2nd player has to join the game.
GAME TIME	30-60	35	Play time in seconds
HOT PLATE	1, 2, 3, 4, 5	5	Represents the maximum number of Hot Plates that could appear during gameplay.
HOT PLATE POINTS	100 – 500, Increments by 50	200	Amount of points awarded per Hot Plate.
POP SOLENOIDS IN ATTRACT	ON/OFF	ON	Solenoids will ‘pop’ particles in game simulation.

BONUS ADJUSTMENTS

Setting	Options	Default	Description
BONUS	ON/OFF	ON	This option sets the bonus mode on or off.
BONUS POINTS THRESHOLD	500-3000 (by 10s)	2100	This sets how many points are needed to win the progressive bonus. Disabled when dynamic threshold is on.
DYNAMIC THRESHOLD	ON/OFF	ON	Setting this option to ON will enable the options on the right side of the screen to dynamically control the points needed to win the bonus.

RESET BONUS ON START UP	ON/OFF	OFF	When set to on, the bonus will be reset to the set reset value when power to the game is cycled.
BONUS RESET VALUE	10-9999 (by 10s)	1000	This setting will determine the beginning value of the Bonus, after a win.
BONUS MAXIMUM	100-9999 (by 10s)	9999	The setting determines the highest Bonus value. The progressive value will stop, once the set maximum is reached. Setting the Reset (minimum) value and the Maximum value to the same level, will cause the Bonus to be stable (non-progressive).
PLAYS TO INCREMENT BONUS	1-10 (by 1s)	1	This option controls how many plays are needed to increase the progressive bonus, in conjunction with the option below.
BONUS INCREMENT VALUE	1-10 (by 1s)	1	This option controls how much the progressive bonus will increase with the number of games played (set in the previous option).
THRESHOLD START – POINTS	500-3000 (by 10s)	2100	Sets the starting point of the threshold value. The threshold will not go above the number set.
MINIMUM THRESHOLD – POINTS	500-3000 (by 10s)	1800	Sets the minimum point value of the threshold. The threshold will not go below the number set.
MAXIMUM THRESHOLD – POINTS	500-3000 (by 10s)	2500	Sets the maximum point value of the threshold. The threshold will not increase past the number set.
THRESHOLD INCREMENT	10-200 (by 10s)	100	When a bonus is won, the threshold will increase by the amount set, but will not go over the START / MAX BONUS THRESHOLD.
PLAYS UNTIL THRESHOLD INCREMENT	1-100 (by 1s)	1	Determines how many games need to be played before incrementing the threshold.
THRESHOLD DECREMENT	10-100 (by 10s)	20	When the bonus is not won within the number of games in the next option (see below), the threshold will decrease by this amount, but never go below MINIMUM BONUS THRESHOLD.
PLAYS UNTIL THRESHOLD DECREMENT	1-200 (by 1s)	20	Determines how many games need to be played before decrementing the threshold.
PROGRESSIVE BONUS SIGN	ON/OFF	OFF	Enables communication to bonus sign. (Only if a bonus sign is installed)

AUDITS

TYPE	CURRENT	LIFETIME
COIN CHUTE 1 CREDITS PAGE 1	0	0
COIN CHUTE 2 CREDITS PAGE 1	0	0
TOTAL CREDITS PAGE 1	0	0
FREE PLAYS PAGE 1	0	0
PAID PLAYS PAGE 1	0	0
TOTAL GAMES PLAYED PAGE 1	0	0
GAME TICKETS PAGE 2	0	0
COMPETITION TICKETS PAGE 2	0	0
BONUS TICKETS PAGE 2	0	0
BONUS TICKETS % PAGE 2	0.00%	0.00%

TOTAL TICKETS	PAGE 2	0	0
AVERAGE TICKETS	PAGE 2	0.00	0.00
OPERATING %	PAGE 2	0.00%	0.00%
TOTAL POINTS	PAGE 3	0	0
AVERAGE POINTS PER GAME	PAGE 3	0.00	0.00
HOT PLATE POINTS	PAGE 3	0	0
HOT PLATE POINTS %	PAGE 3	0.00%	0.00%
HOT PLATE HITS	PAGE 3	0	0
HOT PLATE HIT %	PAGE 3	0.00%	0.00%
1 PLAYER GAMES	PAGE 3	0	0
2 PLAYER GAMES	PAGE 3	0	0
BONUS HITS	PAGE 3	0	0
BONUS HITS %	PAGE 3	0.00%	0.00%
TOTAL HITS	PAGE 4	0	0
TOTAL MISSES	PAGE 4	0	0
TOTAL BALLS DETECTED	PAGE 4	0	0
HIT % OF BALLS DETECTED	PAGE 4	0.00%	0/00%
MISS % OF BALLS DETECTED	PAGE 4	0.00%	0.00%

This screen will show all bookkeeping information. Pressing RESET on this screen will clear the current audits. A screen will appear asking to confirm that you want to do this.

Press **ATTENDANT** for previous screen

Press **MENU** for next screen

There are 4 pages of audits.

DIAGNOSTICS

AUDIO TEST:	These options test the speaker output.
I/O TEST:	This test allows the operator to test the ball gate and switches, test solenoids and lamps and test the ticket dispensers (if installed).
LED TEST	This test allows the operator to cycle through the colors on the LED light bars above and below the monitors.
I/R FRAME TEST	This test will allow the operator to test the functionality of the I/R detection frame on each monitor. To test the functionality, the operator must through balls at the screen.
RESTORE FACTORY SETTINGS	Selecting this option will restore all settings to factory default values.
CLEAR CREDITS	Selecting this will clear all credits on the game that are less than the amount needed for one play. If you need to clear all credits while a game is in play, press the RESET button during the game and the credits will be cleared.
CLEAR TICKETS	Selecting this will clear all tickets owed on the game.
RESET BONUS	Selecting this option will reset the bonus to its default value. If the default value has not been modified, it will set bonus to 1000.
INTERNET OPTIONS	Selecting this option will allow you to connect your machine to the internet via Wi-Fi in order to receive remote software updates and support. Follow the on-screen instructions to use.
EXIT WITHOUT SAVING	Exit the menu without saving any changes.
EXIT AND SAVE	Save any changes made and exit the menu.

If you have any questions or comments, please call our service department at +1 732 905 6662. We are open Monday through Friday 08:00 – 16:30 EST (USA).

Plexiglass Components

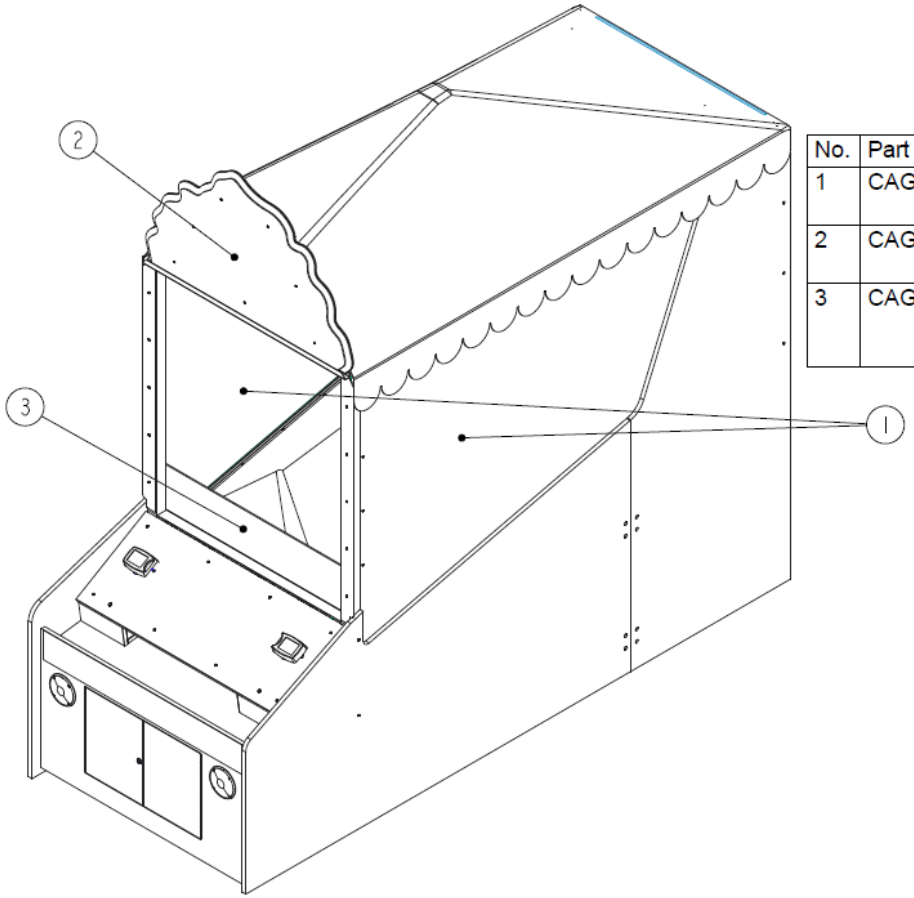

No.	Part Number	Part Name
1	CAG&GBTPPLC13	Acrylic Side Wall, .177" Clear Acrylic, Rev B , BTP
2	CAG&GBTPSCP06	Marquee Front Plexi, Rev, Rev D, BTP
3	CAG&GBTPPLC08	BALL SHIELD 1/4 CLEAR POLYCARBONATE (LEXAN) Rev F, BTP

SOLENOID ASSEMBLY

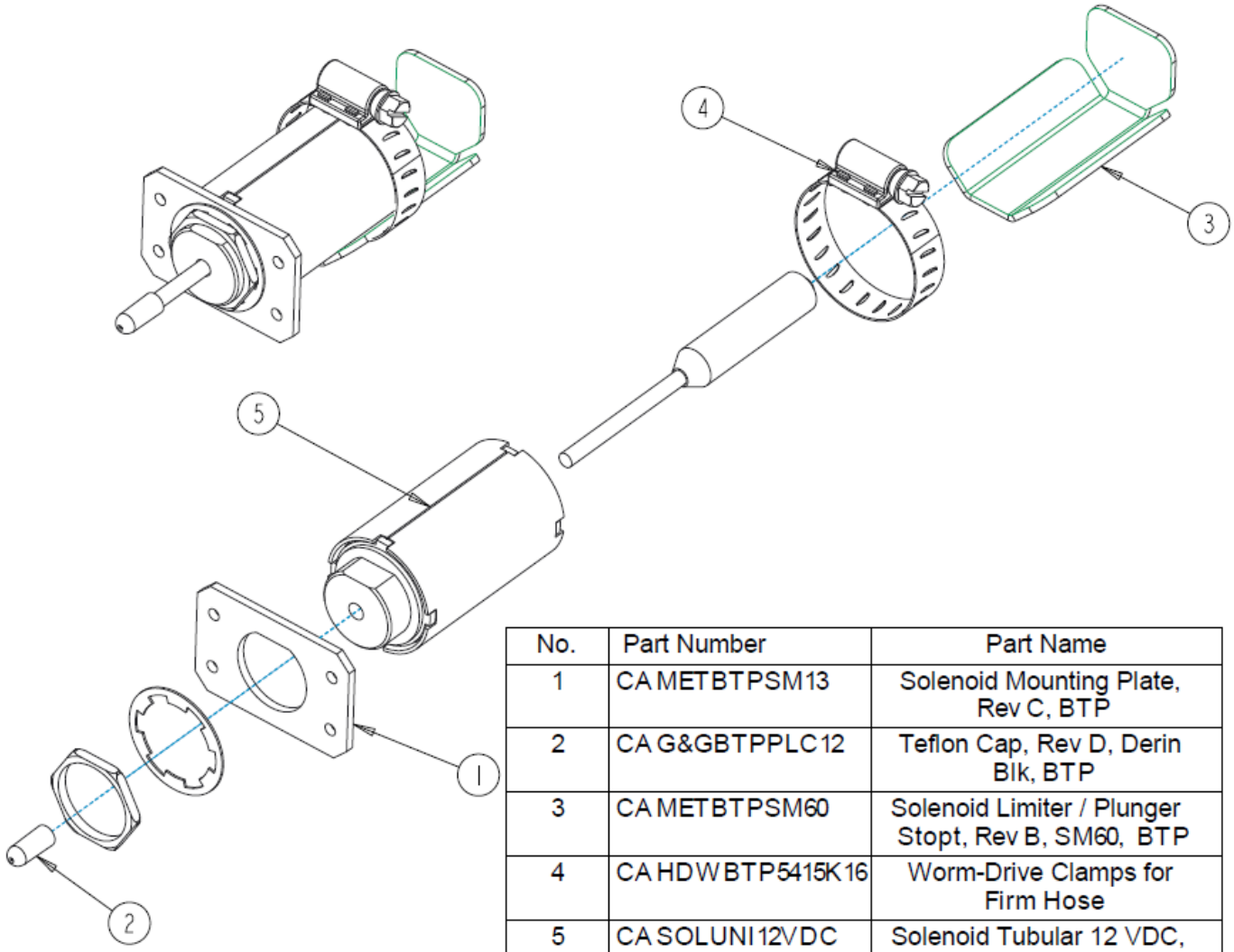

No.	Part Number	Part Name
1	CA METBTPSM13	Solenoid Mounting Plate, Rev C, BTP
2	CA G&GBTPPLC12	Teflon Cap, Rev D, Derin Blk, BTP
3	CA METBTPSM60	Solenoid Limiter / Plunger Stopt, Rev B, SM60, BTP
4	CA HDW BTP5415K16	Worm-Drive Clamps for Firm Hose
5	CA SOLUNI12VDC	Solenoid Tubular 12 VDC, BTP

PLAYER INFO CENTER (PIC) SIGN

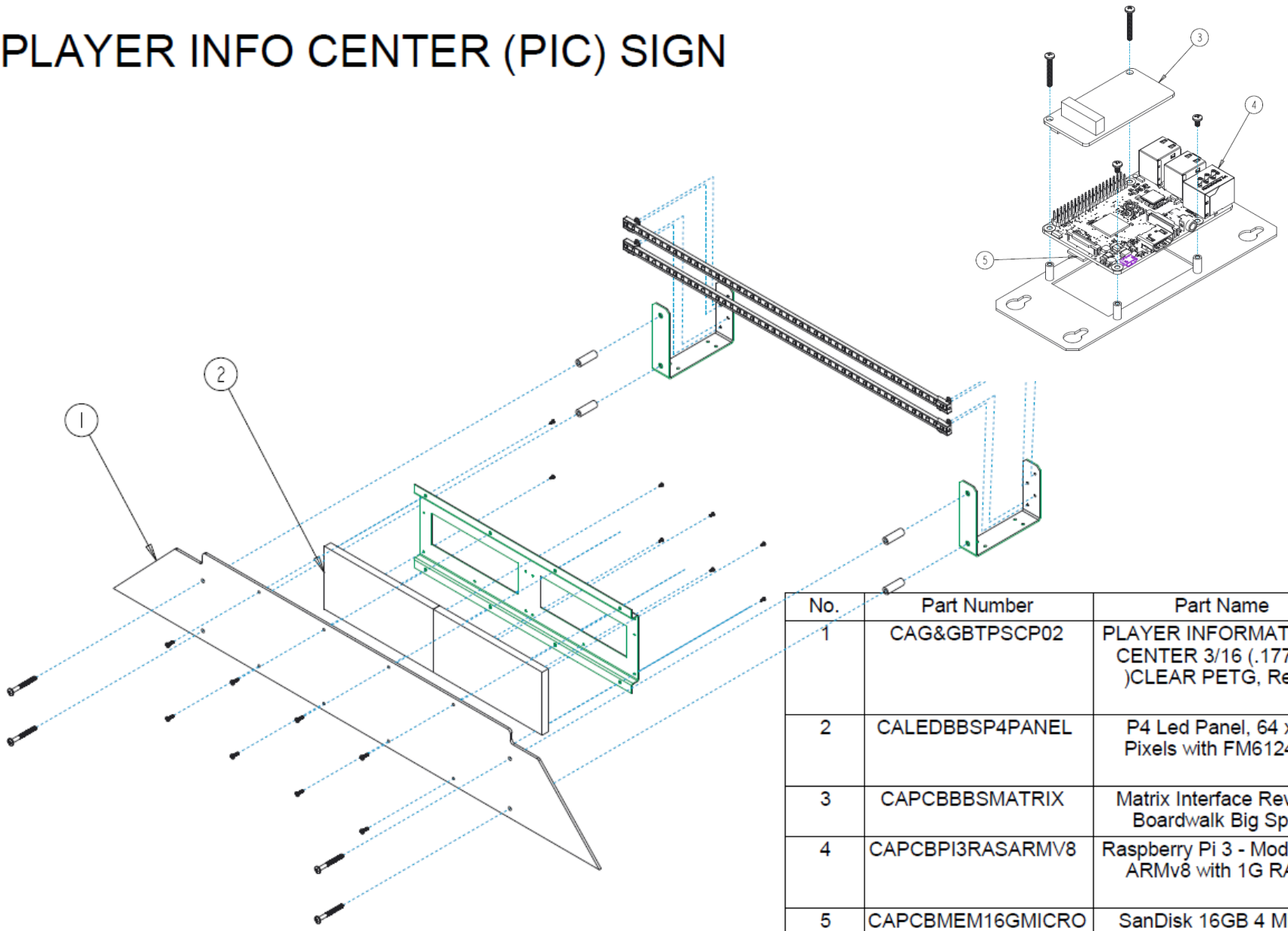

No.	Part Number	Part Name
1	CAG&GBTPSCP02	PLAYER INFORMATION CENTER 3/16 (.177/.187)CLEAR PETG, Rev E
2	CALEDBBSP4PANEL	P4 Led Panel, 64 x 32 Pixels with FM6124 IC
3	CAPCBBBSMATRIX	Matrix Interface Rev A, Boardwalk Big Spin
4	CAPCBPI3RASARMV8	Raspberry Pi 3 - Model B - ARMv8 with 1G RAM
5	CAPCBMEM16GMICRO	SanDisk 16GB 4 Micro SDHC Memory Card Raspberry PI 2.0

Console Components

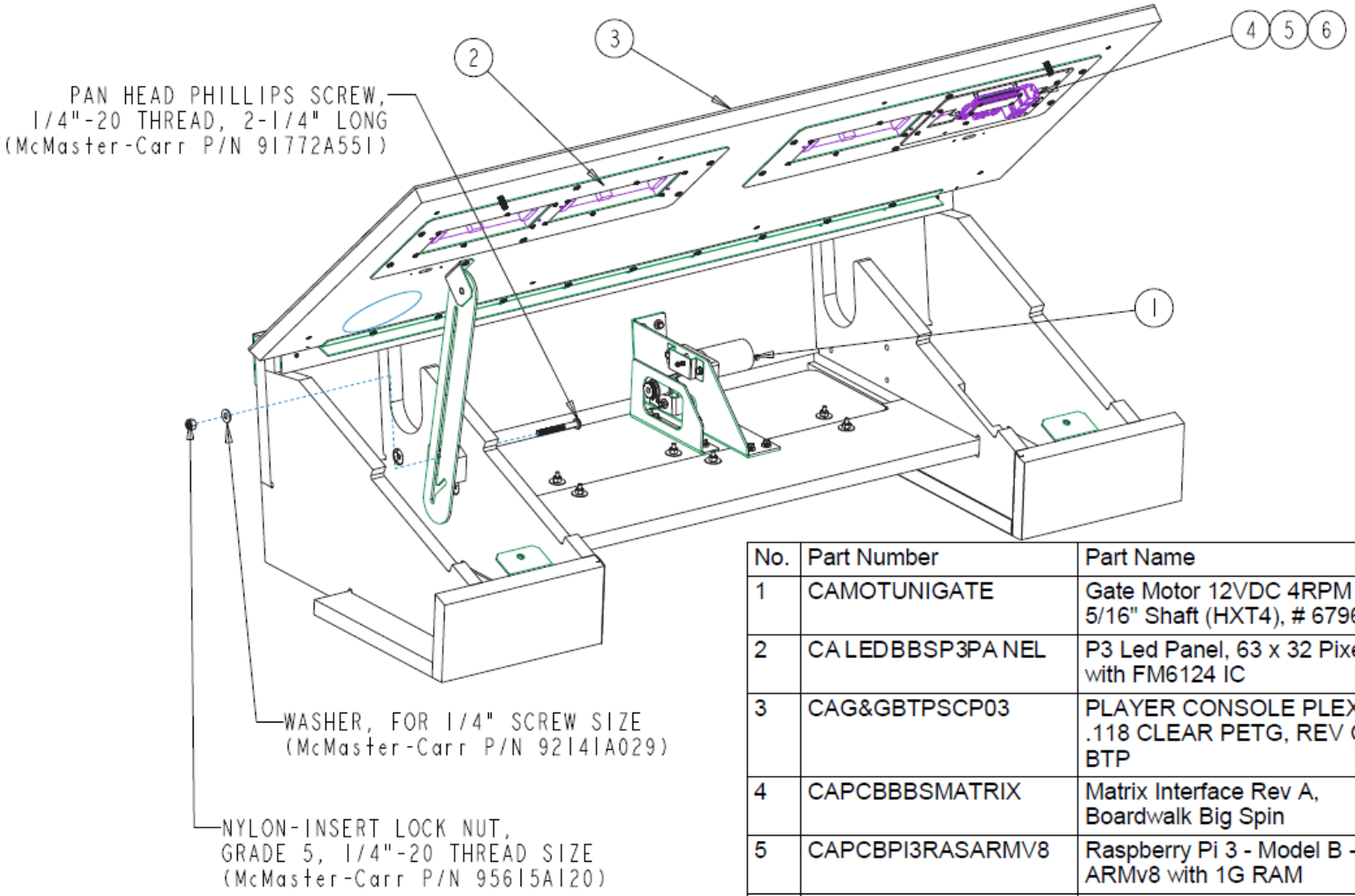

No.	Part Number	Part Name
1	CAMOTUNIGATE	Gate Motor 12VDC 4RPM 5/16" Shaft (HXT4), # 6796
2	CA LEDBBSP3PA NEL	P3 Led Panel, 63 x 32 Pixels with FM6124 IC
3	CAG&GBTPSCP03	PLAYER CONSOLE PLEXI, .118 CLEAR PETG, REV G, BTP
4	CAPCBBBSMATRIX	Matrix Interface Rev A, Boardwalk Big Spin
5	CAPCBPI3RASARMV8	Raspberry Pi 3 - Model B - ARMv8 with 1G RAM
6	CAPCBMEM16GMICRO	SanDisk 16GB 4 Micro SDHC Memory Card Raspberry PI 2.0

Ball Gate Motor & Switches

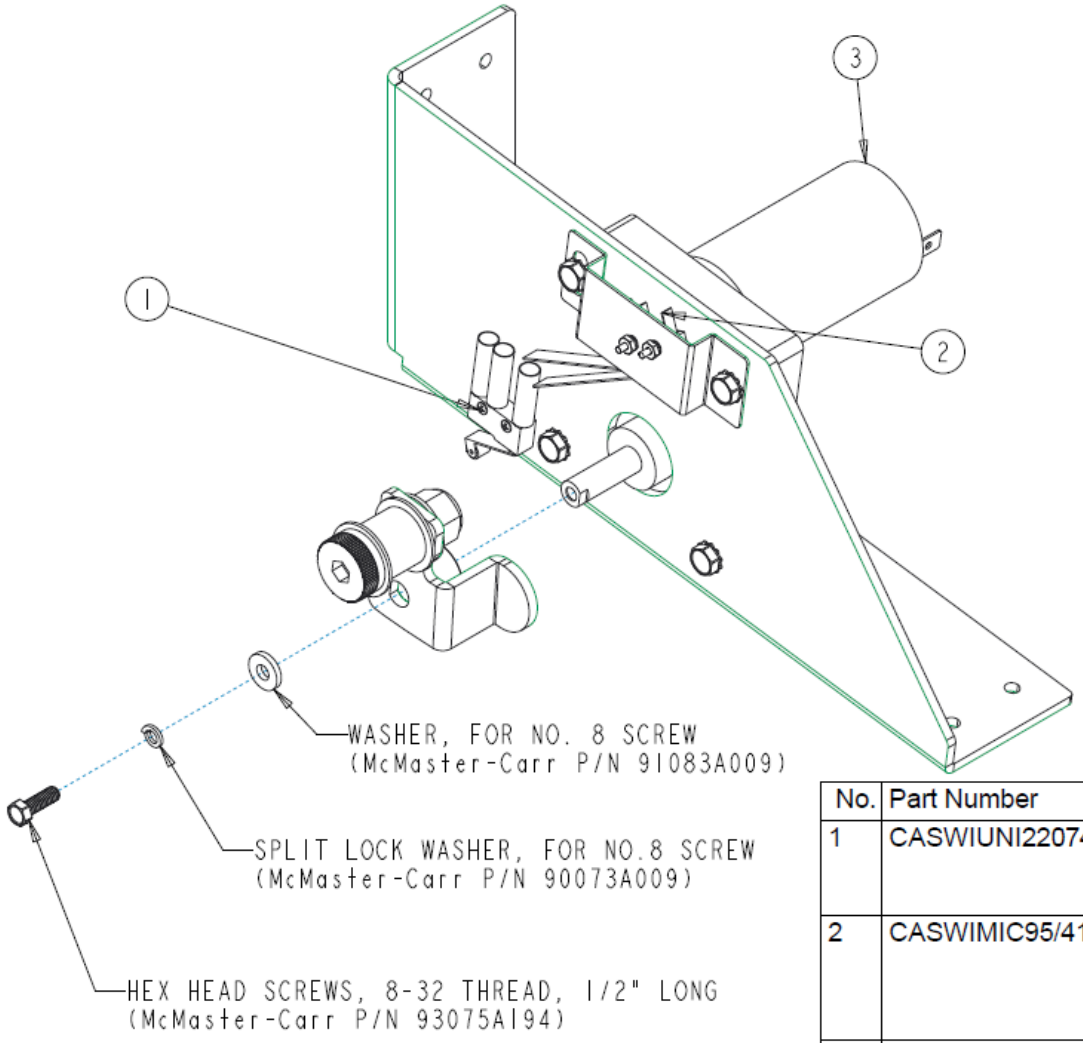

No.	Part Number	Part Name
1	CASWIUNI2207427	Limit switch -w/ Roller Cherry DA 3, BTP, MIN, 1.00 EA
2	CASWIMIC95/4141	Limit switch - Playfield - at the bucket Cherry DA 31.00 EA
3	CAMOTUNIGATE	Gate Motor 12VDC 4RPM 5/16" Shaft (HXT4), # 6796

MONITOR ASSEMBLY

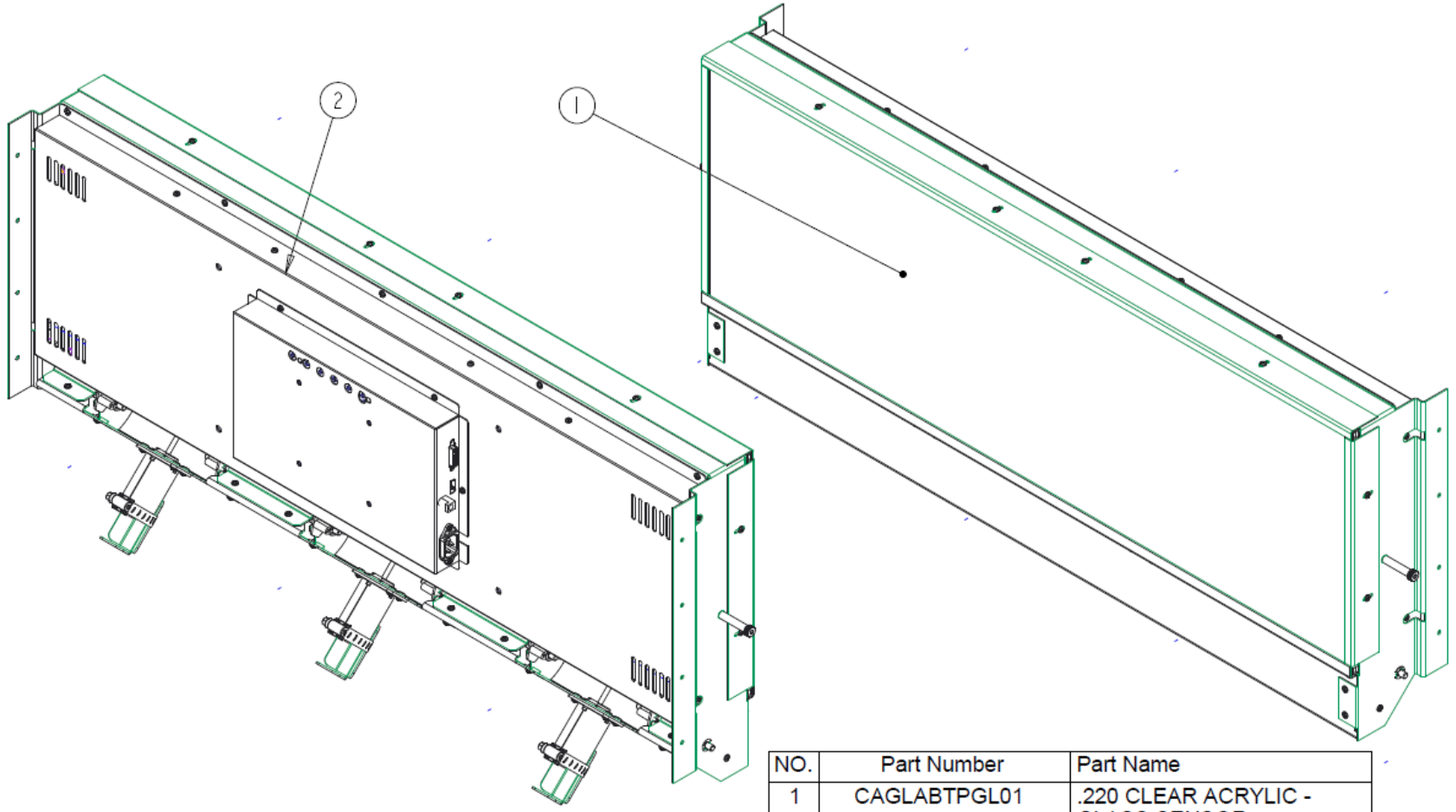

NO.	Part Number	Part Name
1	CAGLABTPGL01	.220 CLEAR ACRYLIC - GLASS SENSOR WINDOW, Rev D
2	CAMONLCD37	37" WIDE STRETCHED LCD MONITOR, W/ Protective Glass 4T, BTP

Ball and IR Frame

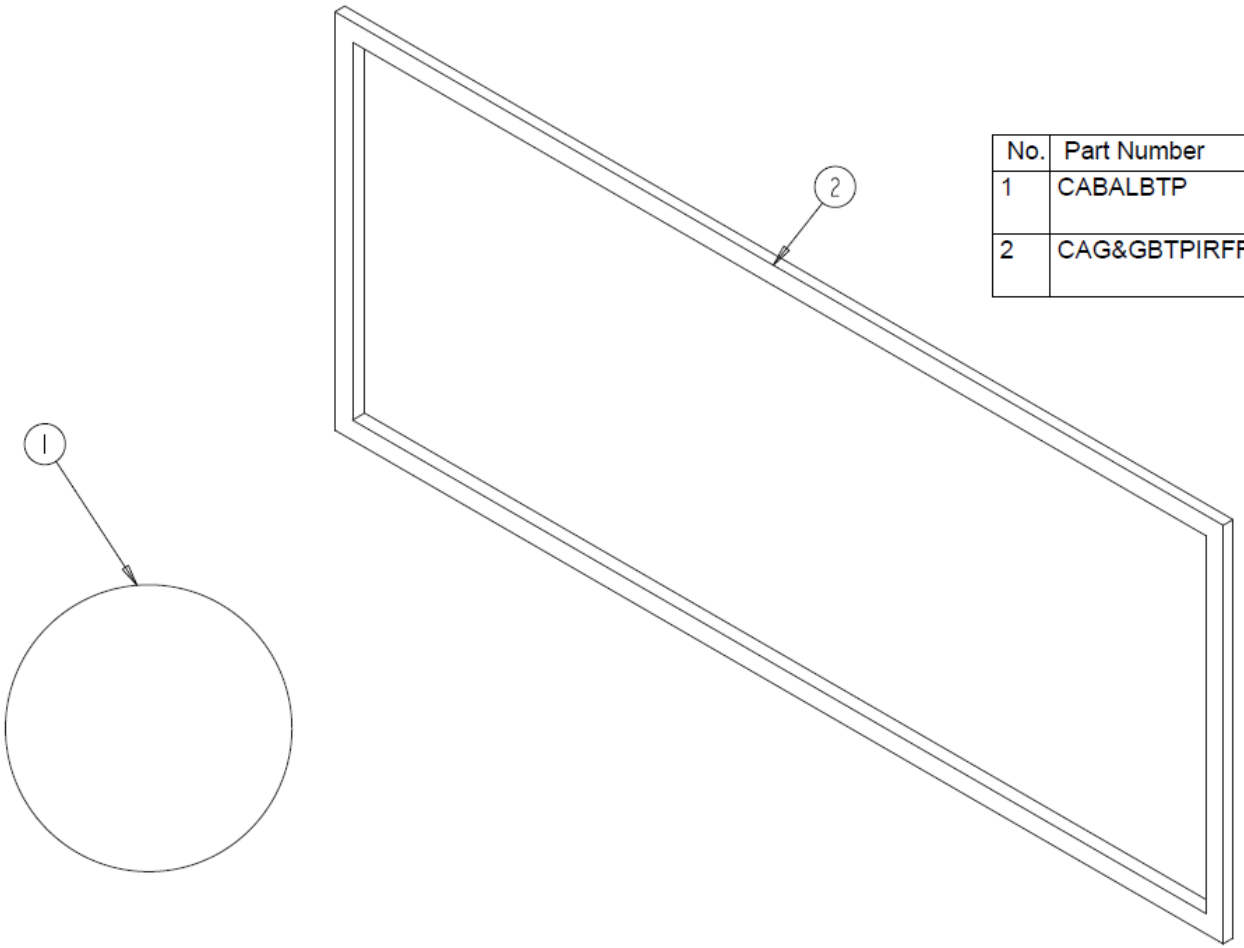

No.	Part Number	Part Name
1	CABALBTP	23MM 60 GRAM RED PLAYING BALL, PACK OF 20, BTP
2	CAG&GBTPIRFRAME	IR Touch Frame, BTP, LV329.4X952X55-17MM

SCHEMATICS

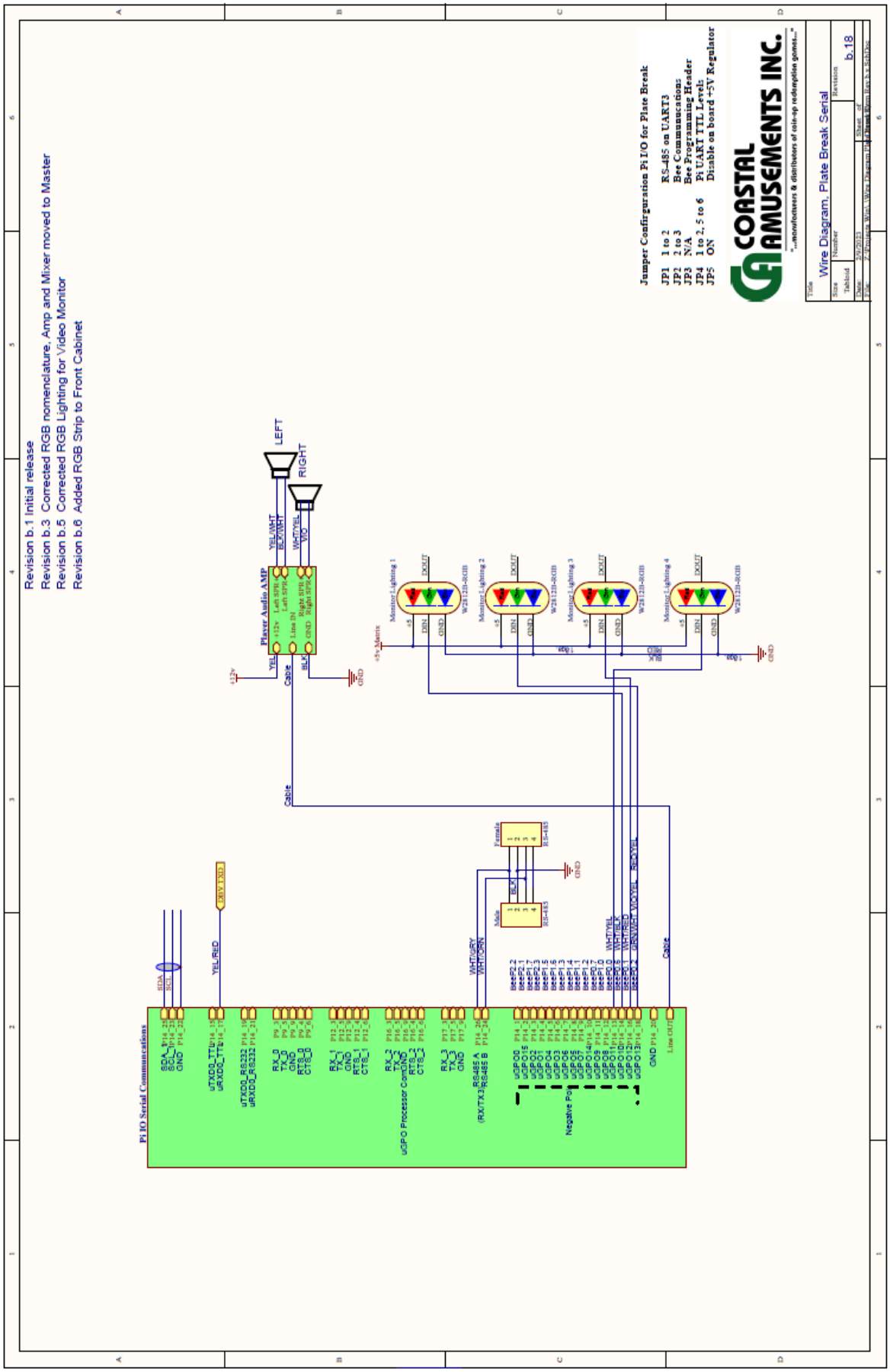
Revision b.1 Initial release
Revision b.3 Corrected RGB nomenclature, Amp and Mixer moved to Master
Revision b.5 Corrected RGB Lighting for Video Monitor
Revision b.6 Added RGB Strip to Front Cabinet
Jumper Confirguration Pi I/O for Plate Break
JP1 1 to 2 RS-485 on UART3
JP2 2 to 3 Bee Communications
JP3 N/A Bee Programming Header
JP4 1 to 2, 5 to 6 Pi UART TTL Levels
JP5 ON Disable on board +5V Regulator
COASTAL AMUSEMENTS INC.
Wire Diagram, Plate Break Serial
b.18
Player Audio AMP
LEFT
RIGHT
Monitor Lighting 1
Monitor Lighting 2
Monitor Lighting 3
Monitor Lighting 4
Pi IO Serial Communications
Negative Pow

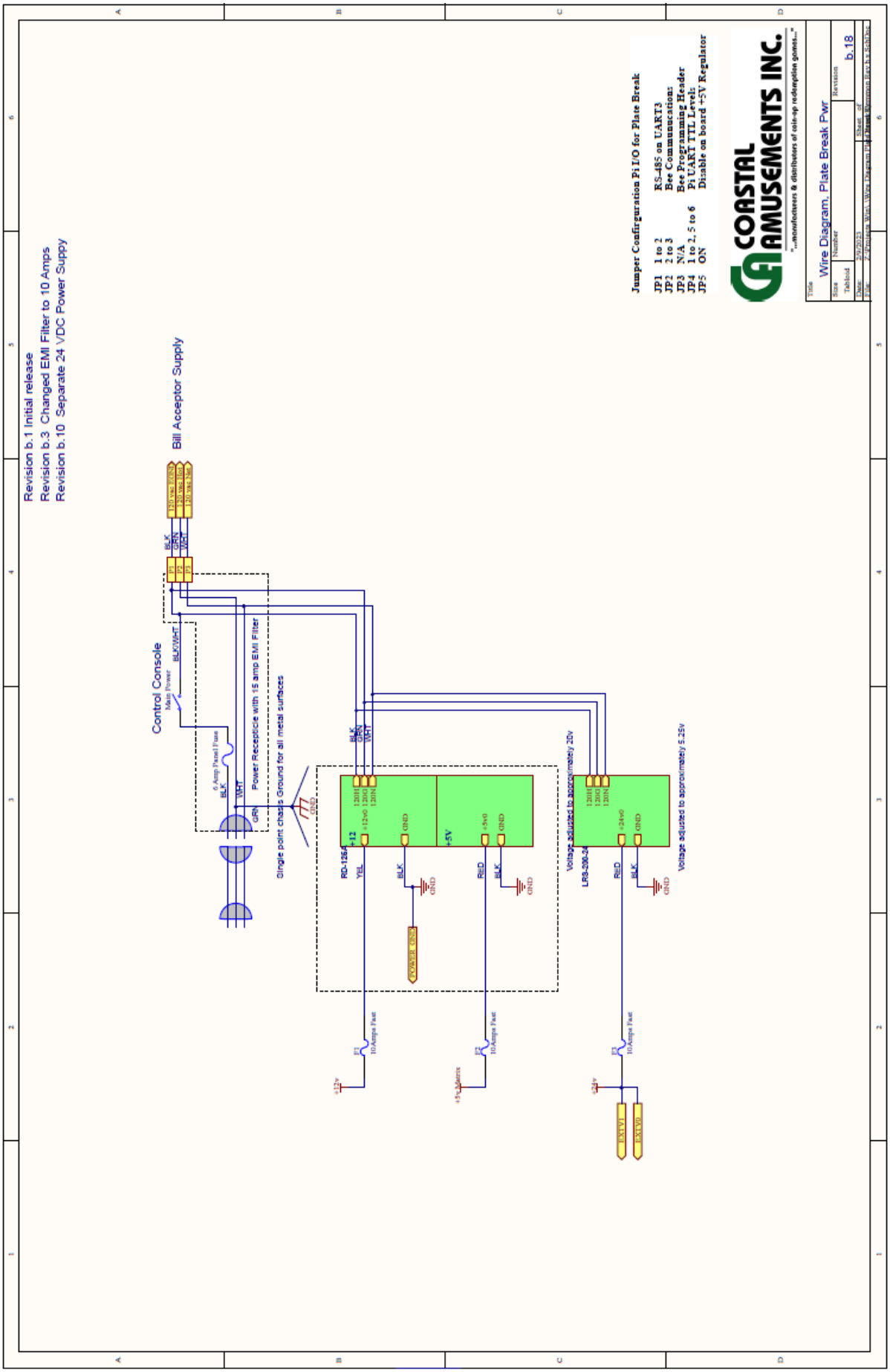
Revision b.1 Initial release
Revision b.3 Changed EMI Filter to 10 Amps
Revision b.10 Separate 24 VDC Power Suppy
Bill Acceptor Supply
Control Console
Main Power
6 Amp Panel Fuse
Power Recepticle with 15 amp EMI Filter
Single point chassis Ground for all metal surfaces
RD-126A
LRS-200-24
Voltage adjusted to approximately 20v
Voltage adjusted to approximately 5.25v
Jumper Configuration Pi I/O for Plate Break
JP1 1 to 2 RS-485 on UART3
JP2 2 to 3 Bee Communications
JP3 N/A Bee Programming Header
JP4 1 to 2, 5 to 6 Pi UART TTL Level:
JP5 ON Disable on board +5V Regulator
COASTAL AMUSEMENTS INC.
Wire Diagram, Plate Break Pwr
b.18

Revision b.1, Initial release
Revision b.10, Added Particle Solenoid Sense

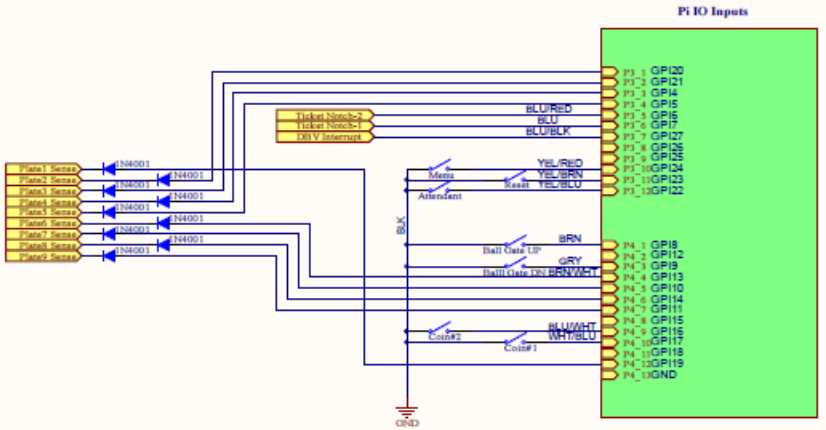

Jumper Configuration Pi I/O for Plate Break

JP1	1 to 2	RS-485 on UART3
JP2	2 to 3	Bee Communucations
JP3	N/A	Bee Programming Header
JP4	1 to 2, 5 to 6	Pi UART TTL Levels
JP5	ON	Disable on board +5V Regulator

COASTAL AMUSEMENTS INC.
"...manufacturers & distributors of coin-op redemption games..."

Title: Wire Diagram, Plate Break Inputs		
Size: Tabloid	Number:	Revision: b.18
Date: 2/9/2023	Sheet of	
File: Z:\Projects Win\...\Wire Diagram Plate Break Inputs Rev b.x SchDoc		

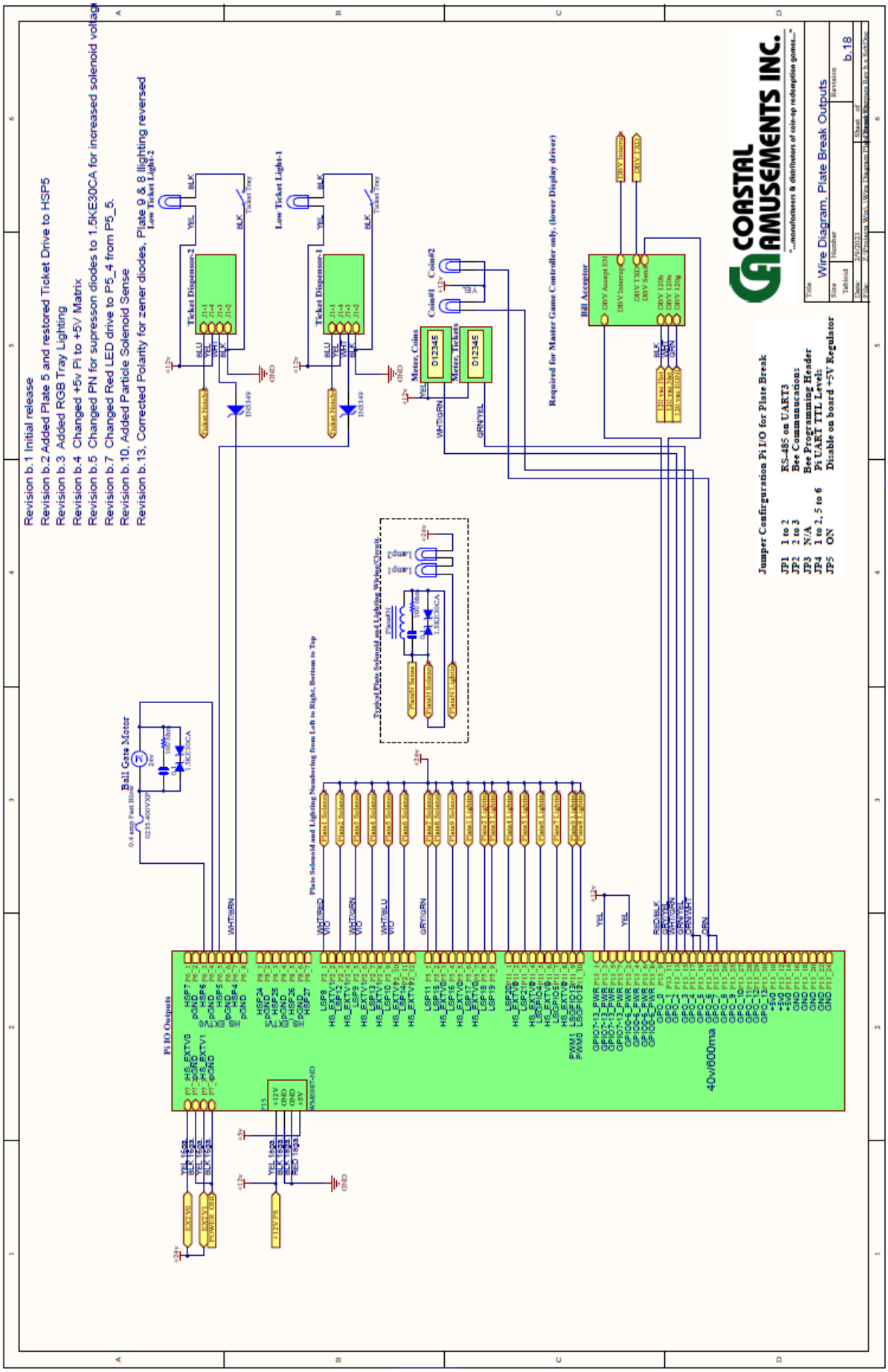
Revision b.1 Initial release
Revision b.2 Added Plate 5 and restored Ticket Drive to HSP5
Revision b.3 Added RGB Tray Lighting
Revision b.4 Changed +5v Pi to +5V Matrix
Revision b.5 Changed PN for supresson diodes to 1.5KE30CA for increased solenoid voltage
Revision b.7 Changed Red LED drive to P5_4 from P5_5.
Revision b.10, Added Particle Solenoid Sense
Revision b.13, Corrected Polarity for zener diodes, Plate 9 & 8 lighting reversed
COASTAL AMUSEMENTS INC.
Wire Diagram, Plate Break Outputs
b.18
Jumper Configuration Pi I/O for Plate Break
JP1 1 to 2 RS-485 on UART3
JP2 2 to 3 Bee Communucations
JP3 N/A Bee Programming Header
JP4 1 to 2, 5 to 6 Pi UART TTL Level
JP5 ON Disable on board +5V Regulator
Required for Master Game Controller only. (lower Display driver)
Ticket Dispenser-2
Ticket Dispenser-1
Low Ticket Light-1
Low Ticket Light-2
Coin#1
Coin#2
Meter, Coins
Meter, Tickets
Bill Acceptor
Ball Gate Motor
Typical Plate Solenoid and Lighting Wiring/Circuit
Plate Solenoid and Lighting Numbering from Left to Right, Bottom to Top
Pi IO Outputs
40v/600ma

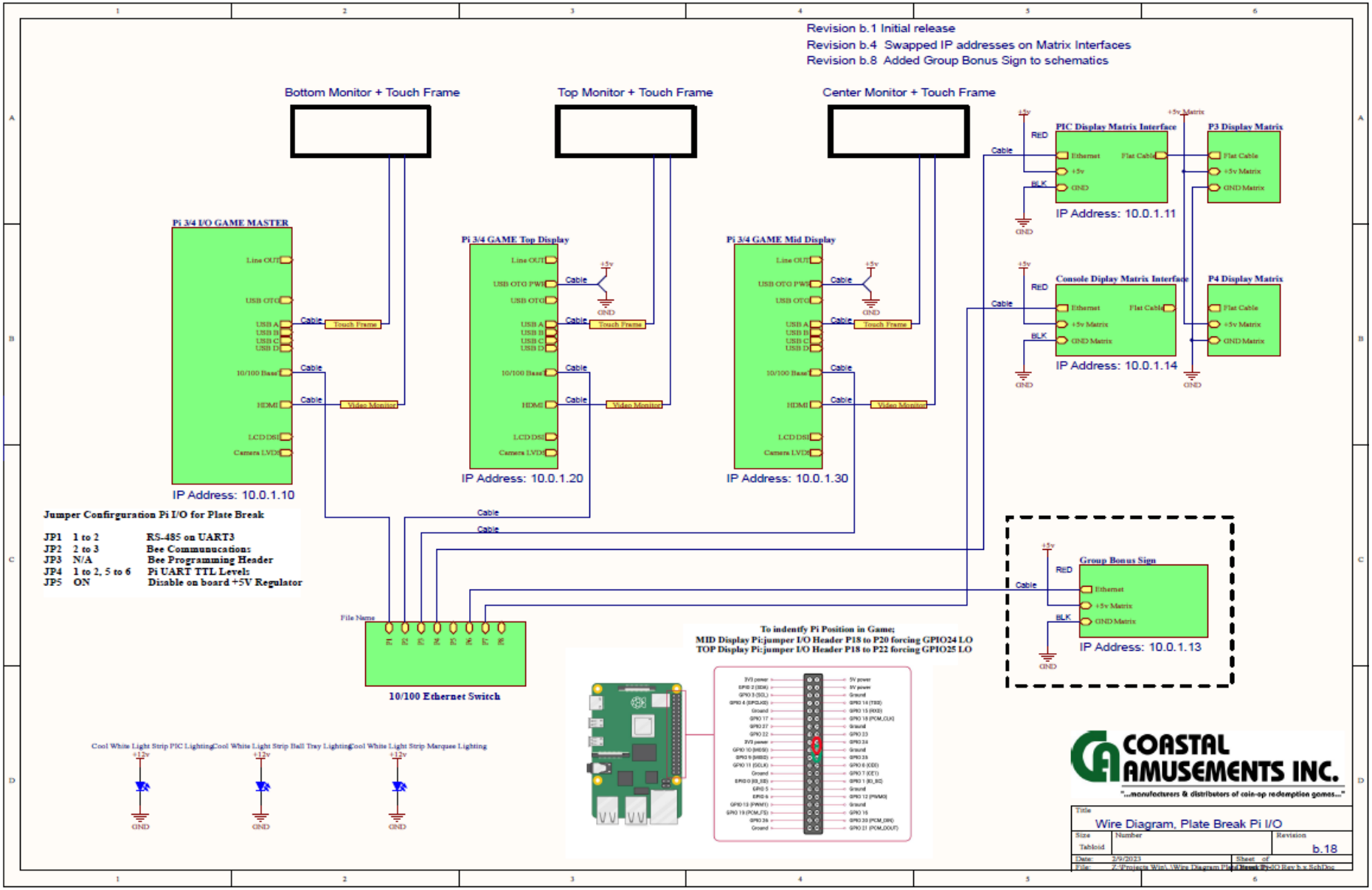
Revision b.1 Initial release
Revision b.4 Swapped IP addresses on Matrix Interfaces
Revision b.8 Added Group Bonus Sign to schematics
Bottom Monitor + Touch Frame
Top Monitor + Touch Frame
Center Monitor + Touch Frame
Pi 3/4 I/O GAME MASTER
IP Address: 10.0.1.10
Pi 3/4 GAME Top Display
IP Address: 10.0.1.20
Pi 3/4 GAME Mid Display
IP Address: 10.0.1.30
PIC Display Matrix Interface
IP Address: 10.0.1.11
P3 Display Matrix
Console Display Matrix Interface
IP Address: 10.0.1.14
P4 Display Matrix
Group Bonus Sign
IP Address: 10.0.1.13
Jumper Configuration Pi I/O for Plate Break
JP1 1 to 2 RS-485 on UART3
JP2 2 to 3 Bee Communucations
JP3 N/A Bee Programming Header
JP4 1 to 2, 5 to 6 Pi UART TTL Levels
JP5 ON Disable on board +5V Regulator
10/100 Ethernet Switch
To indentfy Pi Position in Game:
MID Display Pi:jumper I/O Header P18 to P20 forcing GPIO24 LO
TOP Display Pi:jumper I/O Header P18 to P22 forcing GPIO25 LO
Cool White Light Strip PIC Lighting
Cool White Light Strip Ball Tray Lighting
Cool White Light Strip Marquee Lighting
COASTAL AMUSEMENTS INC.
"...manufacturers & distributors of coin-op redemption games..."
Wire Diagram, Plate Break Pi I/O
b.18

FACTORY WARRANTY

Coastal Amusements, Inc. warranties all parts and components in new games. All parts and components are warranted against material defects and workmanship as follows:

- Proprietary Electronic Hardware: 180 days
- Monitors: 180 days
- Other (non-proprietary) Electronic Hardware: 90 days
- Mechanical Components and Motors: 90 days

Coastal Amusements, Inc. will not be responsible to furnish parts, components or service under warranty if:

- Game components or parts have failed through normal wear and tear.
- Game components or parts have failed because of abuse or abnormal operation.
- Game components or parts have failed due to damage caused by improper service, or service performed by unqualified or unauthorized personnel.
- Game components or parts have failed due to arbitrary or unauthorized modification.

Certain procedures must be followed to ensure the game parts and components are covered under warranty and that proper credit is issued for returned parts and components as follows.

- Customer must provide a valid serial number for the game to be serviced.
- An RMA number must be obtained from our customer service staff for all warranty parts.
- The RMA number must appear on the return shipping carton in order to ensure proper credit.
- Coastal will replace the defective parts with new or factory reconditioned parts.
- Defective parts covered under warranty must be returned within 30 days.
- Defective parts returned after 30 days and before 60 days will incur a 25% restocking charge.
- Defective parts returned after 60 days will receive no credit.

COASTAL
AMUSEMENTS INC.

1950 Swarthmore Ave. Lakewood, NJ 08701

Phone: +1-732-905-6662

sales@coastalamusements.com

www.coastalamusements.com